Date	SYM	REVISION RECORD	AUTH	DR.	CK.
08/07/19	E	UPDATED TO ROHS COMPLIANT UPDATED SPECIFICATIONS	T.B.	B.S	
10/18/19	F	ADDED WEIGHT OF THE PART	T.B.	B.S	
02/14/20	G	UPDATED UL FILE NUMBER	T.B.	B.S	

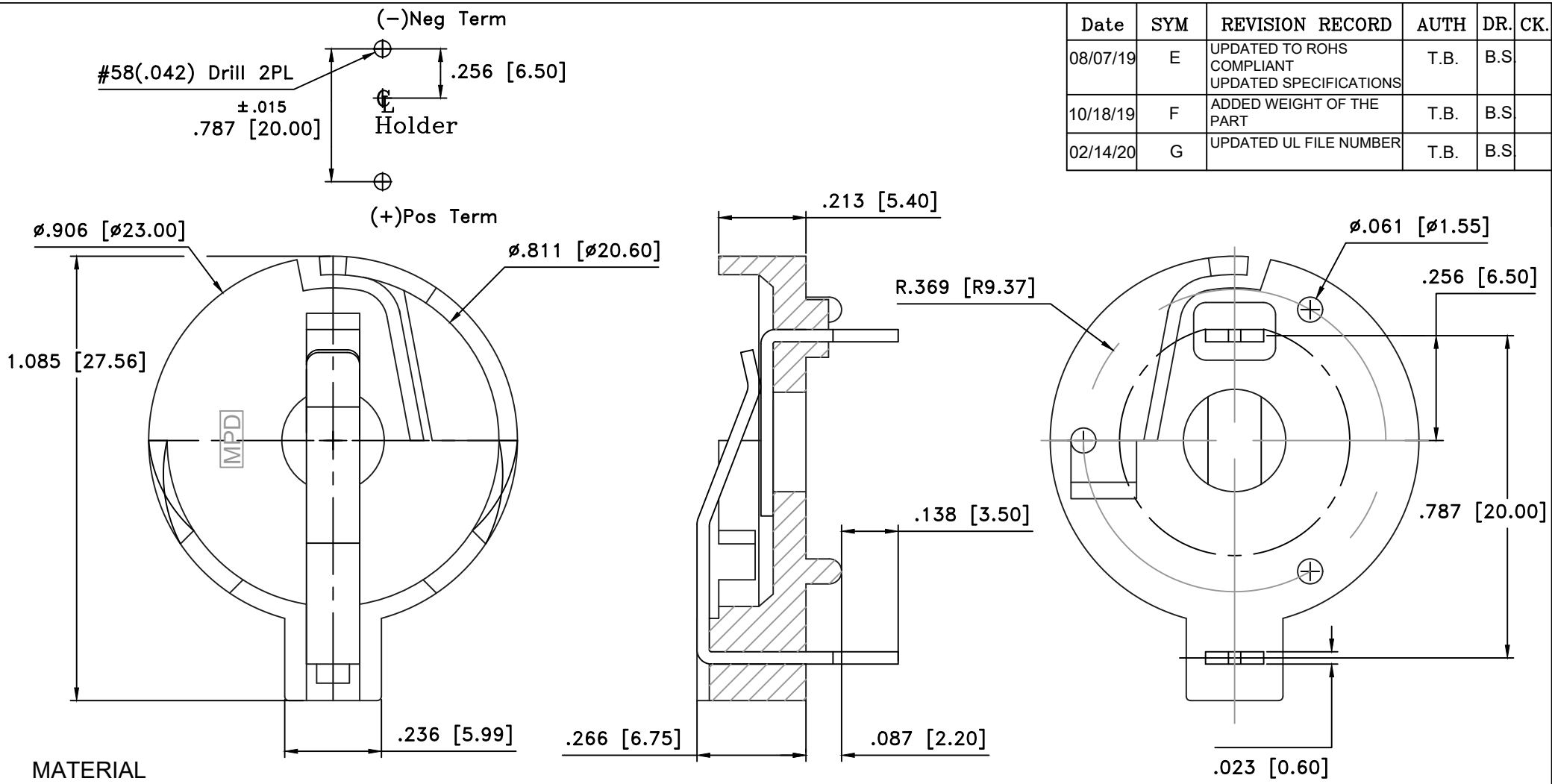

MATERIAL
BODY: NYLON 66 WITH 30% GLASS FILLED, UL FILE NO. E245249)
FLAMMABILITY RATING: UL94V-0
CONTACT: PHOSPHOR BRONZE

FINISH
CONTACT: NICKEL PLATED

SPECIFICATIONS
APPLICATION FOR 3V LITHIUM BATTERY
INSULATOR RESISTANCE: 5000 mΩMIN.
OPERATION TEMPERATURE: -40°C TO +200°C
DURABILITY: 50 CYCLES MIN
CONTACT RESISTANCE: 30 mΩ MAX
ROHS COMPLIANT

Weight: 2.32g Approx.

Tolerance (Except as noted)	MPD Memory protection Devices, Inc 200 Broad Hollow Road, Farmingdale, New York 11735		
decimal ±.5 (.020)		Scale 4=1	Drawn By B.S. Approved By T.B.
Fractional ± .8 (.030)	Title BR/CR 2032 COIN BATTERY HOLDER W/RETAINER ARM		
Angular ± 3°	Date 02/14/20	Drawing Number BS-3	